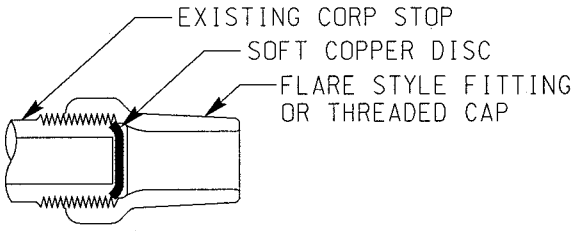

FLARED CORPORATION STOP

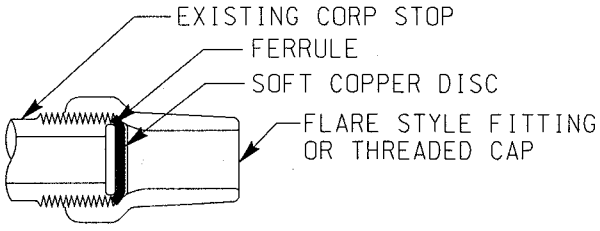

COMPRESSION CORPORATION STOP

PLUG/CAP DETAILS

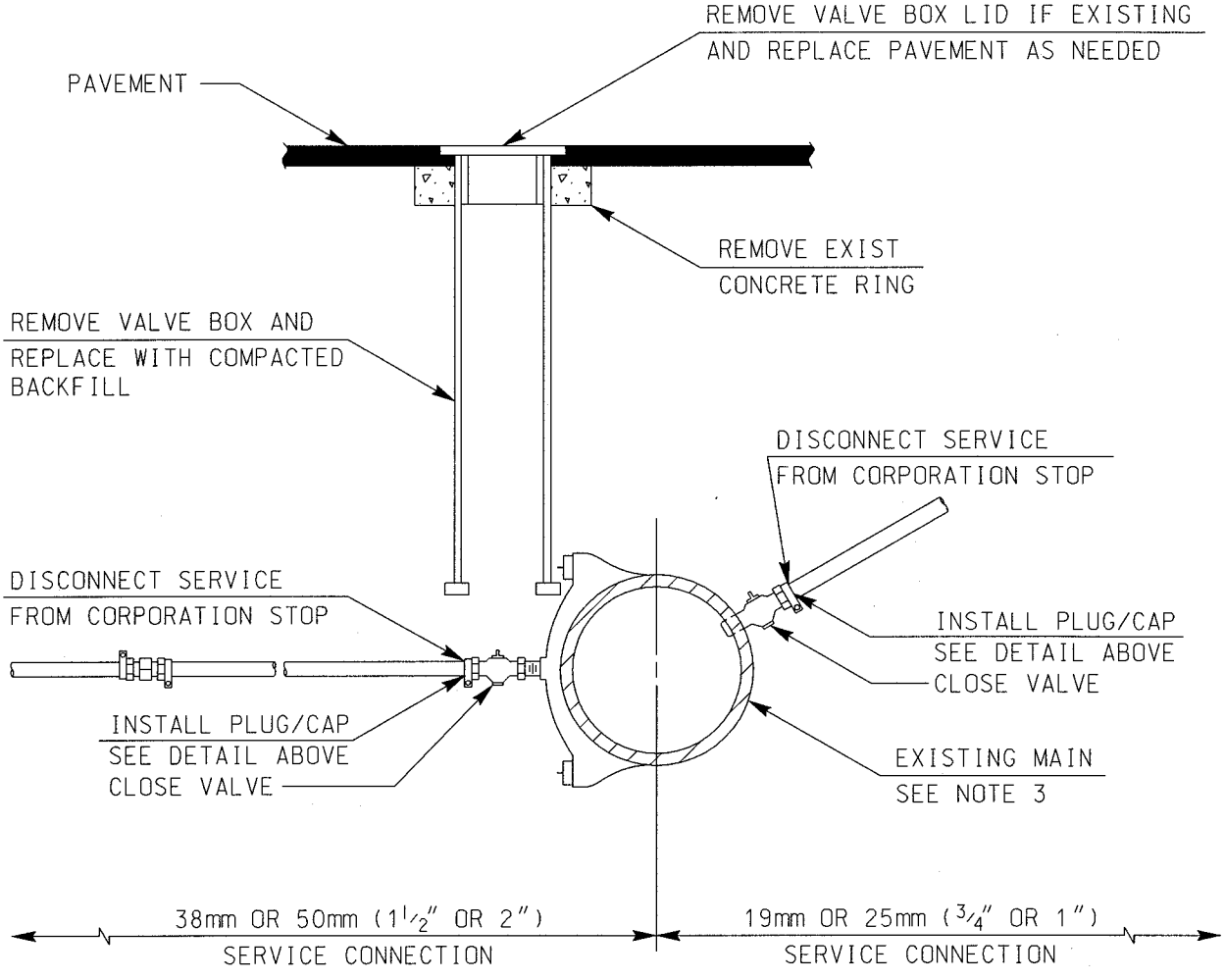

NOTES:

1) REFER TO SECTION 15000 & 15057 OF THE SPECIFICATIONS
2) EXISTING VALVES SHALL BE TURNED TO THE CLOSED POSITION AND VALVE BOXES CUT OFF AND REMOVED
3) USE THREADED PLUG TO PLUG SERVICE WITH THREADED CONNECTION
4) FOR ABANDONMENT OF EXISTING MAINS SEE WP-03
5) PRIOR DISTRICT APPROVAL REQUIRED

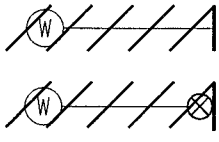

LEGEND ON PLANS

EXISTING WATER SERVICE ABANDONMENT

WATER AGENCIES STANDARDS

COMMITTEE APPROVAL: 03/01/2001

DRAWING NUMBER: WS-08

K:\WAS\Water\Updated 9-03-01\ws08.dgn 21-SEP-2001 07:55